REV	ECN NO.	DESCRIPTION	DRN	APP'D	DATE

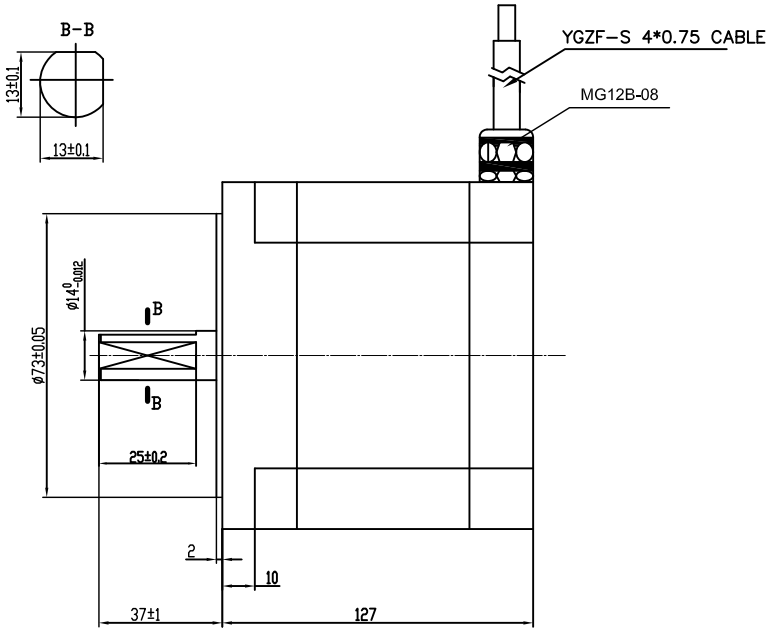

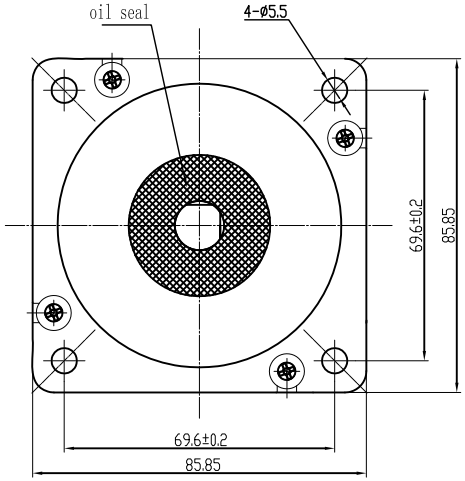

SPECIFICATION

STEP ANGLE	步距角	1.8°/full step(整步)
STEP ANGLE ACCURACY	步距角精度	±5%
NUMBER OF PHASE	绕组相数	2
RATED VOLTAGE	额定电压	3.36VDC
RATED CURRENT	额定电流	7A
RESISTANCE/PHASE	每相电阻	0.48±10% ohms@20°C
INDUCTANCE/PHASE	每相电感	4.4±20% mH@1kHz
HOLDING TORQUE	保持转矩	9N.m
PULL OUT TORQUE	运行转矩	
BACK EMF	反电动势	
DETENT TORQUE	定位转矩	
ROTOR INERTIA	转子转动惯量	3000g.cm²
WEIGHT	重量	3.95Kg
TEMPERATURE RISE	温升	Less than 80K(小于80开)
SOURCE VOLTAGE	驱动器电压	VDC
INSULATION CLASS	绝缘等级	B 130°C
DIELECTRIC STRENGTH	介电强度	900VAC/1S
INSULATION RESISITANCE	绝缘电阻	100MOhm @500VDC
IP CODE	防护等级	IP65
OPERATION AMBIENT	使用环境	Ambient temperature:-25...+50°C,humidity Max. 85%(No condensation)
STORAGE AMBIENT	存储环境	Ambient temperature:-20...+85°C,humidity Max. 85%(No condensation)

PERMISSIBLE RADIAL+AXIAL FORCE
(允许的轴向和径向力)

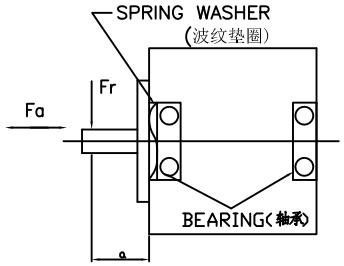

AXIAL-FORCE	轴向压力	Fa=36 N Max.
DISTANCE	距离	a=20 mm
RADIAL-FORCE	径向压力	Fr=130 N Max.
SHAFT RADIAL PLAY	径向间隙	0.02mm Max. @4N
SHAFT AXIAL PLAY	轴向间隙	0.08mm Max. @4N

Wiring Diagram:

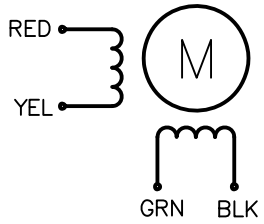

红黄绿黑 L=340mm

UNLESS OTHERWISE SPECIFIED
TOLERANCES:
DECIMALS: ANGULAR:
.x ±0.5 ±0°30`
.xx ±0.25
.xxx ±0.1
UNIT: mm
DO NOT SCALE DRAWING

MATERIAL | CONTR. | DESIGN | DATE | CHECK | APPD

FIRST ANGLE PROJECTION

SCALE 1:1
SHEET OF

P/N.
TITLE Specifications
USED ON FL86STH126-7004A-IP65
DWG NO. REV A

FULLING MOTOR