REV	ECN NO.	DESCRIPTION	DRN	APP'D	DATE

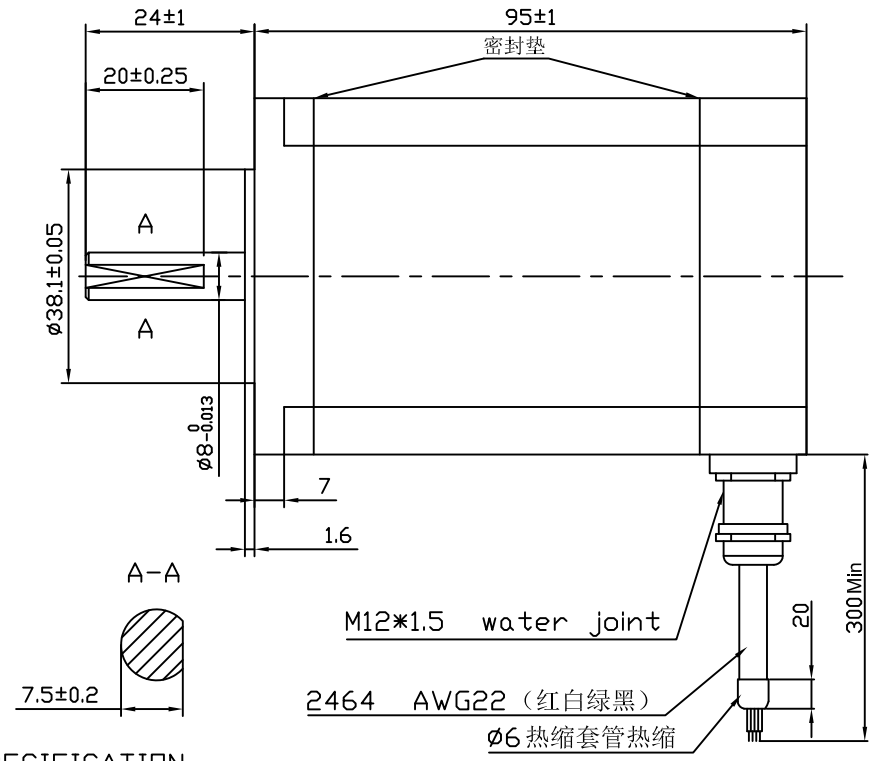

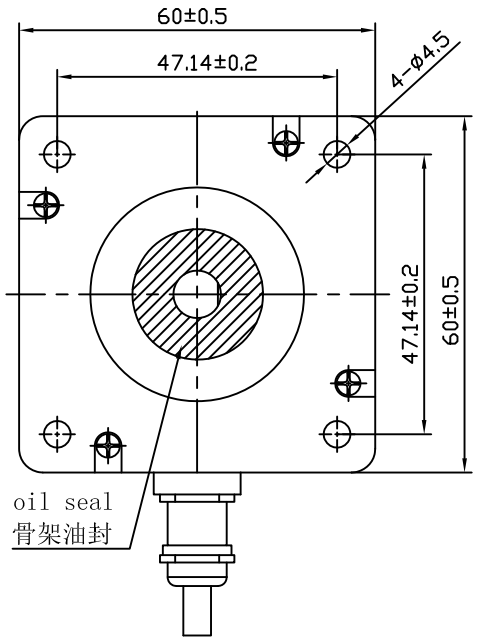

SPECIFICATION

STEP ANGLE	步距角	1.8°/full step(整步)
STEP ANGLE ACCURACY	步距角精度	±5%
NUMBER OF PHASE	绕组相数	2
RATED VOLTAGE	额定电压	4.2VDC
RATED CURRENT	额定电流	2.8A
RESISTANCE/PHASE	每相电阻	1.5±10% ohms@20°C
INDUCTANCE/PHASE	每相电感	6.8±20% mH@1kHz
HOLDING TORQUE	保持转矩	3.0N.m 2 phase on (两相通电)
PULL OUT TORQUE	运行转矩	N.m@ RPM
BACK EMF	反电动势	V @300RPM
DETENT TORQUE	定位转矩	N.cm
ROTOR INERTIA	转子转动惯量	840 g.cm²
WEIGHT	重量	1.4kg
TEMPERATURE RISE	温升	Less than 80K (小于80开)
SOURCE VOLTAGE	驱动器电压	24--48 VDC
INSULATION CLASS	绝缘等级	B 130°C
DIELECTRIC STRENGTH	介电强度	500VAC 1MIN
INSULATION RESISITANCE	绝缘电阻	100MΩhm @500VDC
IP CODE	防护等级	IP65
OPERATION AMBIENT	使用环境	Ambient temperature:-20...+50°C,humidity Max. 85%(No condensation)
STORAGE AMBIENT	存储环境	Ambient temperature:-20...+85°C,humidity Max. 85%(No condensation)

PERMISSIBLE RADIAL+AXIAL FORCE
（允许的轴向和径向力）

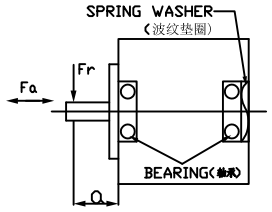

AXIAL-FORCE	轴向压力	Fa=15 N Max.
DISTANCE	距离	a=20 mm
RADIAL-FORCE	径向压力	Fr=75 N Max.
SHAFT RADIAL PLAY	径向间隙	0.02mm Max. @4N
SHAFT AXIAL PLAY	轴向间隙	0.08mm Max. @4N

Wiring diagram

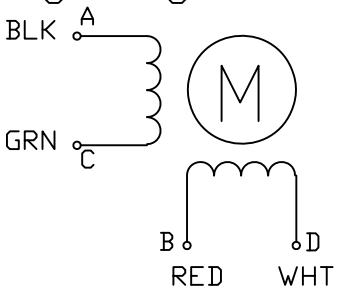

FULL STEP,PARALLEL BIPOLAR

CW DIRECTION	STEP	A	C	B	D
⇩	1	+		+	
	2		+	+	
	3		+		+
	4	+			+
	1	+		+	

CW ,VIEW FROM FRONT SHAFT END

REV	ECN NO.	DESCRIPTION	DRN	APP'D	DATE
A					

UNLESS OTHERWISE SPECIFIED TOLERANCES:
DECIMALS: .x ±0.5 .xx ±0.25 .xxx ±0.1
ANGULAR: ±0°30`
UNIT: mm
DO NOT SCALE DRAWING

MATERIAL | CONTR. | DESIGN | CHECK | APPD | DATE

FIRST ANGLE PROJECTION

SCALE NTS
SHEET OF

P/N.
TITLE Specifications
USED ON FL60STH86-2804AF-IP65
DWG NO. REV A

FULLING MOTOR